Paragon Outdoor Aluminum Louvered Pergola 10'×12'-Grand Tuscan

Assembly Instructions

STRUCTURE 4+1 Years Limited Warranty

Register your pergola at
www.paragon-outdoor.com
for an extra **1 year** of coverage!

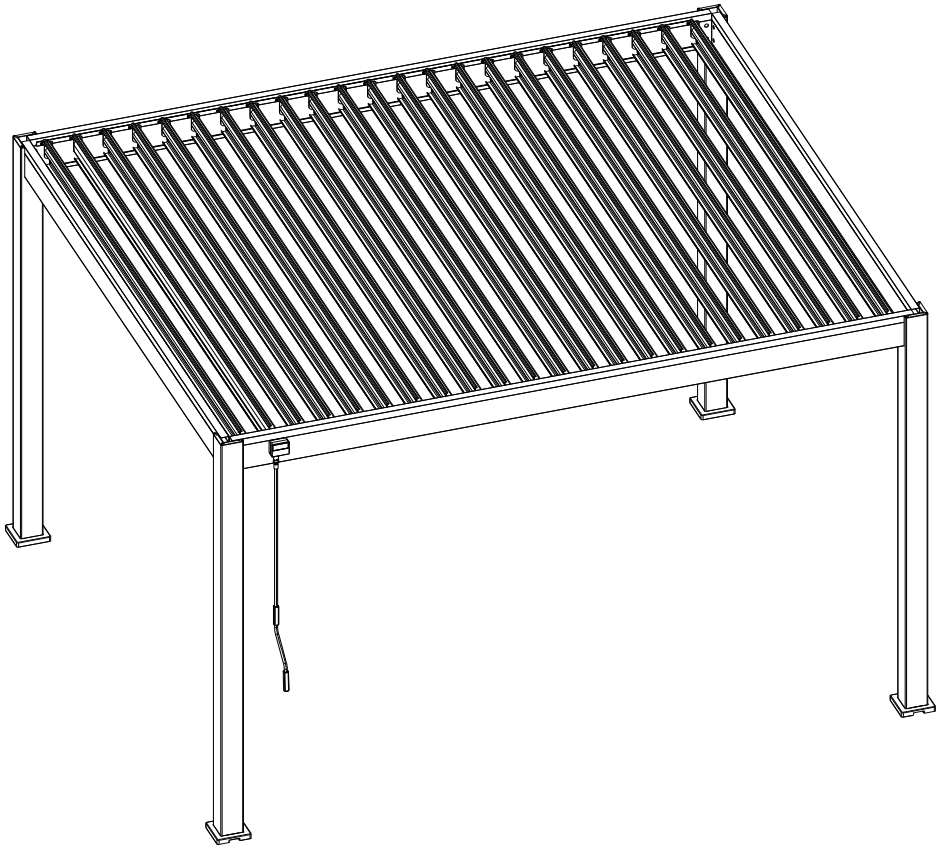

PARAGON OUTDOOR

@paragonoutdoorcompany

Paragon Group USA

Customer Service Contact Information: 1-877-782-4482

support@paragon-outdoor.com

Paragon Outdoor Aluminum Louvered Pergola 10'×12'

Please read the following instructions completely before you begin assembly. Any errors made during installation are not covered by the product's warranty. If you have any questions during the installation process, please call us at 1-877-782-4482.

NECESSARY TOOLS AND SAFETY GEAR(NOT SUPPLIED)

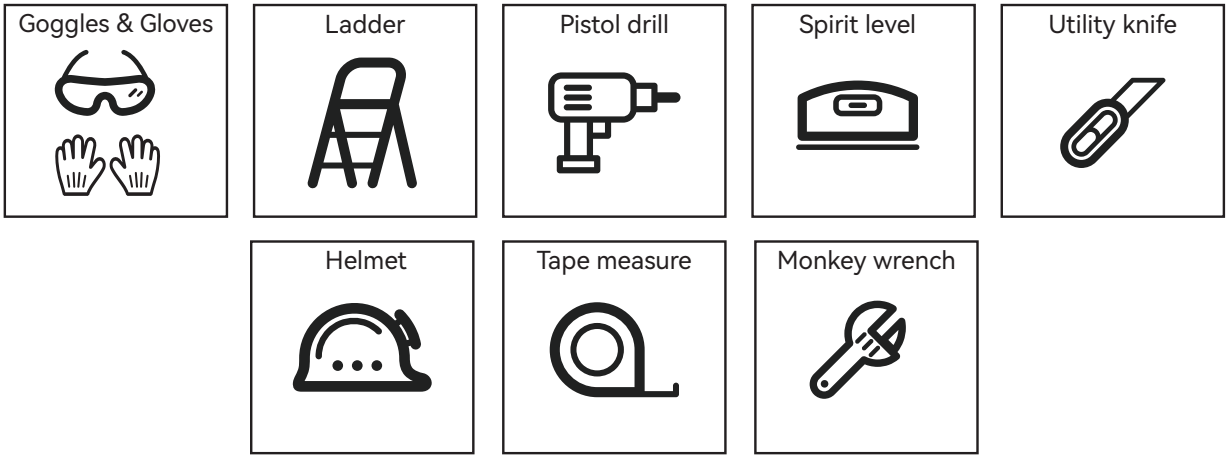

2D&3D FOOTING MEASUREMENT

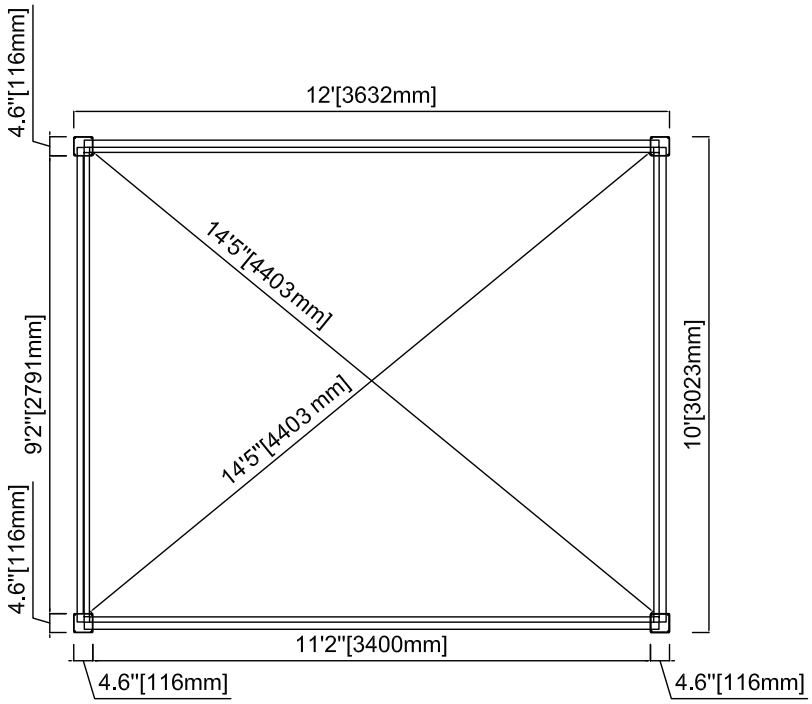

2D&3D FOOTING MEASUREMENT

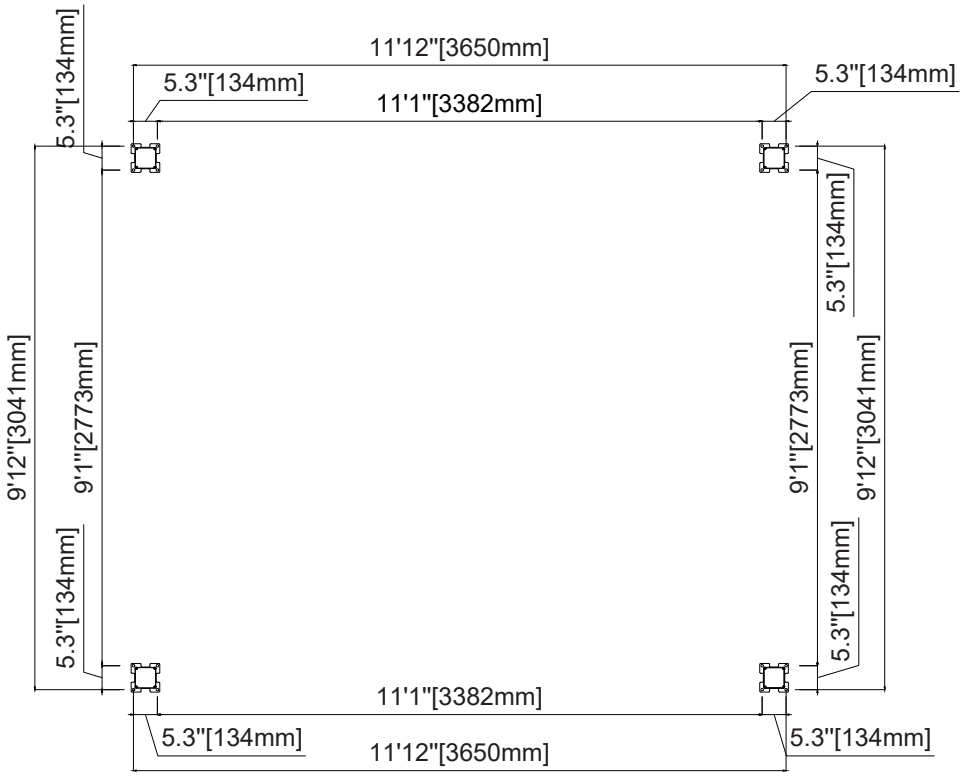

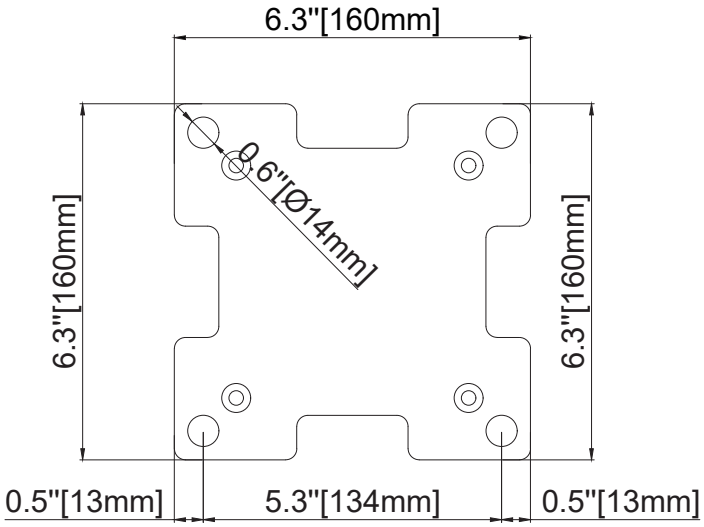

Paragon Outdoor's 4 Year Limited Warranty

Items Included in Warranty: PRGRT-1012GY, PRGRT-1214GY, PRGRT-1220GY

Limited Warranty

Paragon Outdoor warrants to the original purchaser that all components and hardware in its products, under normal use and service conditions, will be free from defects in manufacturing and materials for a period of 4 years* from the date of original retail purchase subject to the definitions, terms and conditions contained in this warranty. This warranty period covers all parts including aluminum, steel, hardware and accessories.

Paragon Outdoor will replace any defective part within the warranty period, at its discretion, if it is found to be defective of workmanship or materials. Paragon Outdoor may request photographs, videos, or physical return of the defective part for verification purposes.

Warranty Conditions

1. This warranty shall be valid only if the product is installed, cleaned, handled and maintained in accordance with Paragon Outdoor's written recommendations listed below.
2. Without derogating from the above, damage caused by use of force, incorrect handling, inappropriate use, neglectful use or assembly or maintenance, accidents, impact from foreign objects, vandalism, pollutants, alteration, painting, connecting, gluing, sealing not in accordance with the user's manual, or damage resulting from cleaning with incompatible detergents and minor deviations of the product are not covered by this warranty.
3. This warranty does not apply to damage resulting from "force majeure", which includes but is not limited to, hail, storm, tornado, hurricane, blizzard, flood, or fire effects, beyond stated claims.
4. This warranty is void if structural parts and components used are not compatible with Paragon Outdoor's written recommendations.
5. This warranty applies to the original owner and registrant and is non-transferable.

SKU/Series/Item	Warranty Duration	Extended Warranty
PRGRT-1012GY, PRGRT-1214GY, PRGRT-1220GY	4 years	+ 1 year

*Extended warranty is applied when product is registered on www.paragon-outdoor.com within 1 month of purchase.

Operation: Hard-Top Gazebos and Pergolas

1. These are four-season products, meaning that they may be left up year-round. However, any accumulation of snow must always be removed from the roof of the unit.
2. The unit must be anchored using the appropriate hardware based on the flooring in which it is being anchored to.
3. Check all hardware for tightness before and during usage of the unit. Tighten screws at least twice a year.
4. The maximum weight allowance for an accessory attached to the center beam is 40 lbs.
5. If your product allows it, remove any mosquito netting and curtains during the winter months.

Planning Assembly

1. It is the consumer's responsibility to comply with building rules, regulations, zoning restrictions or any other regional restrictions and obtain the required permits before purchasing the product and installing it.
2. Make sure that every part is in the box before beginning installation.
3. Some parts may have sharp edges; it is recommended to wear gloves, protective eyewear and closed shoes.
4. You must schedule enough time to complete assembly as you cannot leave the product unattended if it is not fully assembled, even if bolted to the ground.
5. A minimum of 3 people are required for a safe assembly of the product. This will vary depending on certain steps of installation.
6. Follow each instruction manual carefully to ensure the strength of the product.
7. To avoid damage to the product and its part, use the proper tools. Do not use the product as a support. The use of a ladder may be necessary at certain stages of assembly.
8. Keep the instruction manual and the parts list in case of future needs or references.
9. Do not assemble the product on days of wind or rain.

Maintenance

For all products:
1. In case of a defective part or if a problem occurs while using this product, please contact Paragon Outdoor Customer Service at (877) 782-4482.
2. To order replacement parts, identify the model number and the part number found in your assembly manual.
3. Optional accessories may be available for your product such as mosquito nets, curtains, canopy replacements or more. Please contact your retailer for more information.

Safety Information

IT IS VERY IMPORTANT TO READ AND FOLLOW ALL SAFETY PRECAUSTIONS BEFORE ASSEMBLY AND DURING USE OF THE PRODUCT.

1. Keep children and pets away from assembly area.
2. When assembling and using the product, basic safety precautions must always be followed to reduce risks of personal injuries and damages to the product and its surroundings.
3. Ensure that all parts are in the boxes before starting the assembly. Is it recommended to wear protective gloves since some of the parts have sharp edges.
4. Begin the assembly and install the product more than 10 ft. away from any obstructions including, but not limited to, a fence, overhanging branches, a laundry line or electrical wire and as much as possible in a place protected from the wind.
5. Always install the product on a level platform and be anchored according to the surface recommendations in the assembly instructions.
6. Check all hardware for tightness before and during the use of the product. Tighten screws at least twice a year.
7. Do not install the product in a space where there is a possibility of high winds.

Care and Cleaning

For all products:
1. For cleaning: use a mild soap or soft detergent and wash with warm water using a sponge or fabric cloth. Rinse with clean water.
2. Snow must always be removed from the roof of the unit.

Customer Service Contact

If you are experiencing any issues with the assembly of your new structure, please do not return – our expert customer service team will help you with all questions for a smooth assembly process.

Email: support@paragon-outdoor.com
Call: +1 (877) 782-4482

Hours of Operation

Speak with an Expert Customer Service Agent: Monday – Friday: 8:00 am – 5:00 pm CST
We are available 24 hours a day, 7 days a week. Please allow up to 24 hours for a response.

CARTON 1/4(POSTS AND LOOSE PARTS)

Reference	Parts	Quantity
A	Post	2
A2	Post	2

Reference	Parts	Quantity
Q1	Post skirt	4
Q2	Base plate	4

Reference	Parts	Quantity
Q15	10×80 Expansion bolt	16
Q20	6×35 Socket screw 6X35	16

Reference	Parts	Quantity
Z3	4mm Allen wrench	1
Z4	4mm Hex bit	1

Reference	Parts	Quantity
Z5	6mm Allen wrench	1
Z6	6mm Hex bit	1
Z7	10mm Flat wrench	1

CARTON 2/4(BEAMS)

Reference	Parts	Quantity
B	Master Beam	1
B1	Back Beam	1
C	Side Beam	2
D	Cap Beam	2
F	Connector bar	2
H	Crank handle	1

CARTON 2/4(BEAMS)

Reference	Parts	Quantity
Q7	Beam fixing screw	24
Q8	Gearbox	1
Q9	Box cover	1
Q10	Plastic cap	24
Q11	Cylinder	1
Q12	Plastic cap	46

Reference	Parts	Quantity
Q16	Locking cap	2
Q17	Plug	44
Q18	Washer	2
Q21	6×45 Socket screw 6X45	3
Q24	Plastic latch	44

ATTENTION!

Connecting Bar(F) & Brush Inside!

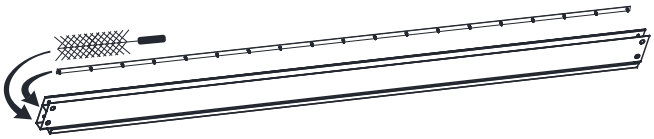

CARTON 3/4(LOUVERS)

Reference	Parts	Quantity
G	Louver	12

CARTON 4/4(LOUVERS)

Reference	Parts	Quantity
G	Louver	10
G1	Master louver	1

CARTON 4/4(LOUVERS)

Reference	Parts	Quantity
Q3	Master louver end	**1**
Q4	Louver end cap A	**22**
Q5	Louver end cap B	**23**
Q14	5×6 Socket screw 5X6	**92**

Reference	Parts	Quantity
Q6	Spin for louver	**45**
Q13	Rubber clog	**46**
Q16	Locking cap	**45**
Q19	6×35 Socket screw 6X35	**45**

Reference	Parts	Quantity
Z1	3mm Allen wrench	**1**

Reference	Parts	Quantity
Z2	3mm Hex bit	**1**

ASSEMBLY GUIDELINES

STEP 1: Assembly of Louvers

STEP 2: Building the Frame

STEP 3: Installing Louvers

ASSEMBLY GUIDELINES

Attention:
Please note that the outlet on the skirt should be in the front position for the front side, while for the rear side, the outlet is a mirror image of the front face.

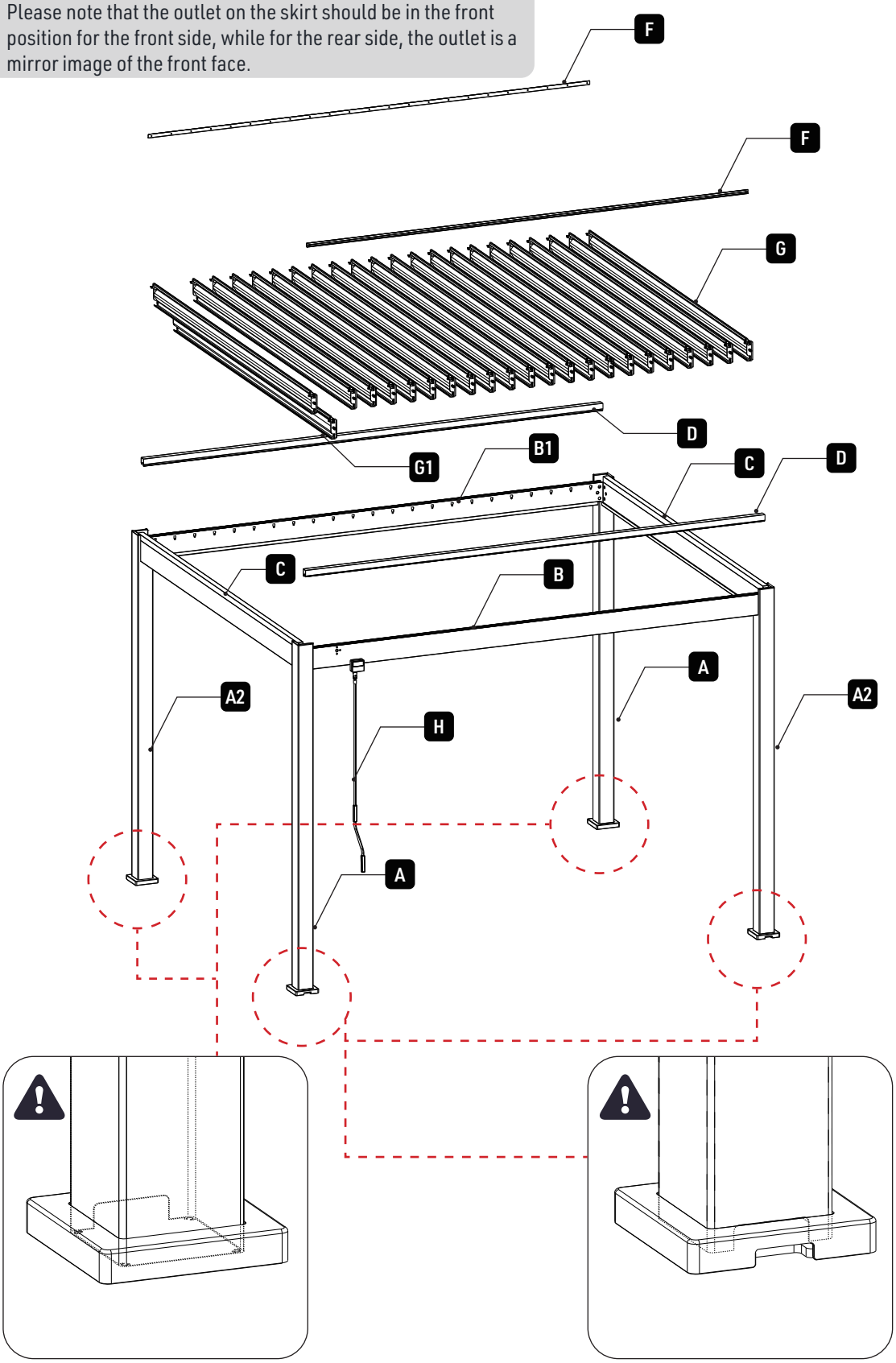

STEP 1 Assembly of Louvers

Components

Parts

G		22
G1		1

Q3		1
Q4		22
Q5		23
Q6		45
Q13		46

Q14	5×6	92
Q16	lock nut	45
Q19	6×35	45

Tools

Z1	3mm	1
Z2	3mm	1

Z3	4mm	1
Z4	4mm	1
Z5	10mm	1

Attention:
1. Master louver G1 will be assembled with louver end cap Q5/Q3-qty 1
This master louver will attach to gear box (Q8) in later step.
2. Louvers G will be assembled with louver end caps Q5/Q4-qty 22

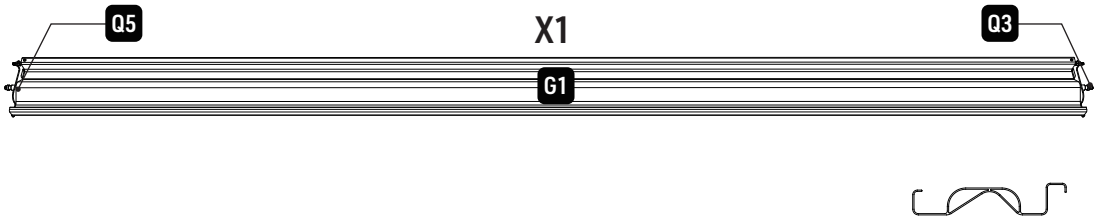

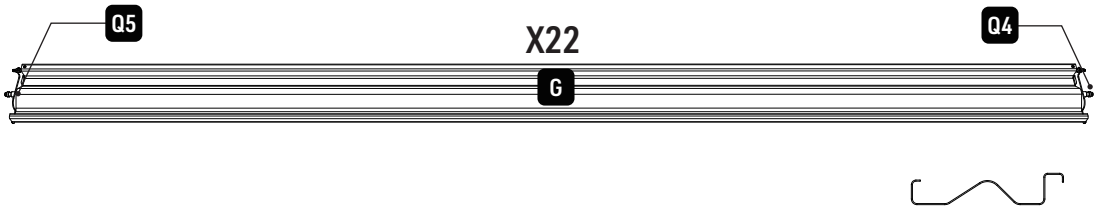

STEP 1-1

Attention:
Do not overtighten. Q19 Screw. It should not extend past Q16.

Assemble the louver end caps **Q4** and **Q5** as shown below.

Q4x22

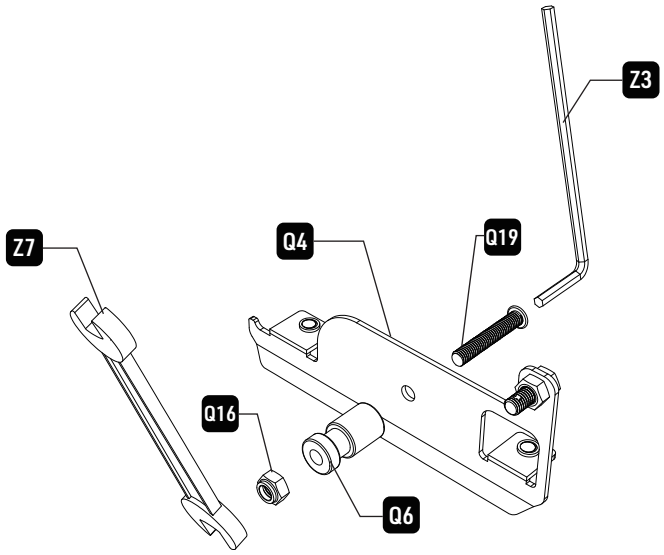

Q5x22

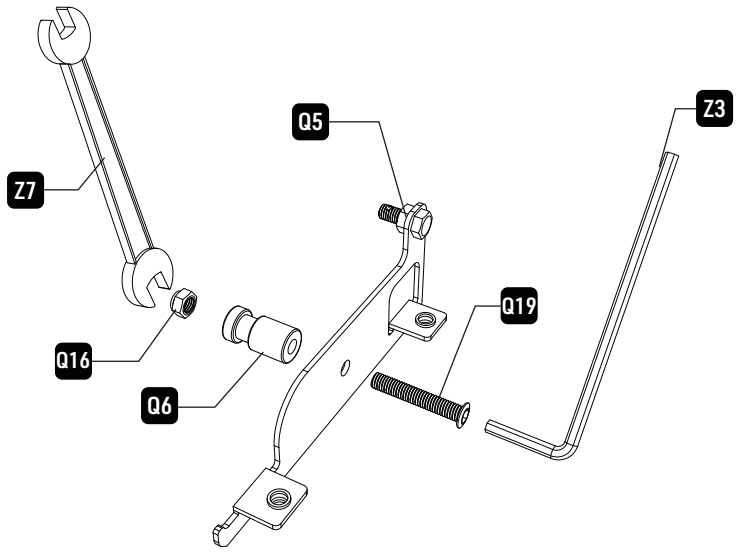

STEP 1-2

Attention:
G1 (master louver) with louver end caps Q3/Q5 will control the gear box (Q8) that opens and closes the louvers.

Attaching **Q3**(master louver end cap)/**Q5**(louver end cap) to **G1**(master louver) and attaching **Q4/Q5** to **G**(louver). Use qty 2 parts of **Q14,** once attached, place **Q13**(rubber clog) to each holes at end of louver. **Q3** is for master louver and it's pre-installed. Please identify **Q3** from **Q4/Q5**.

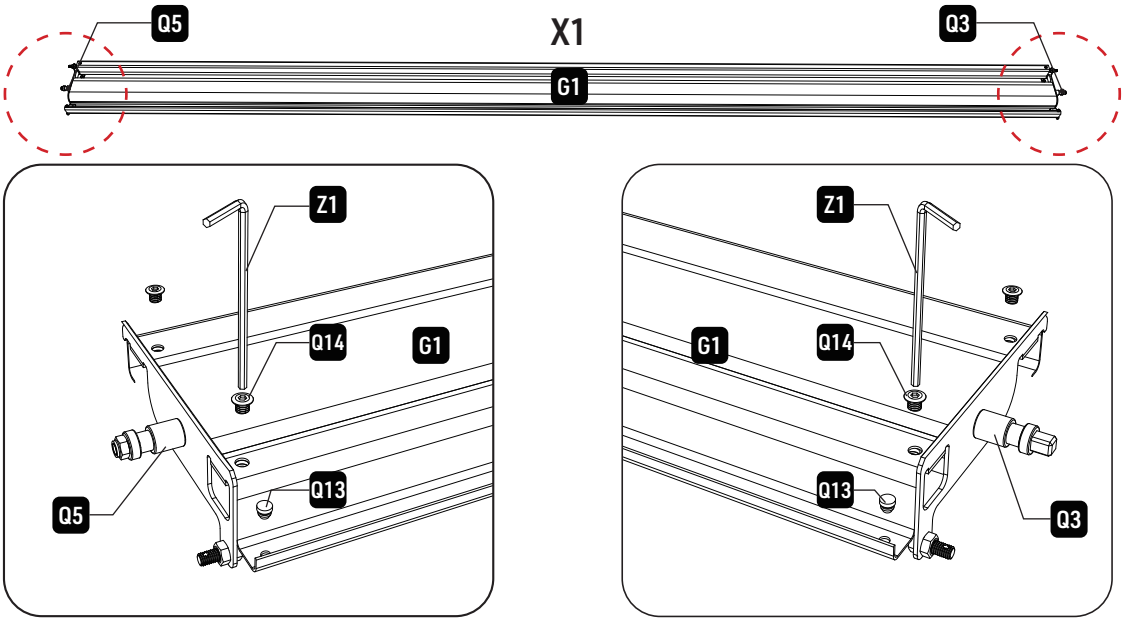

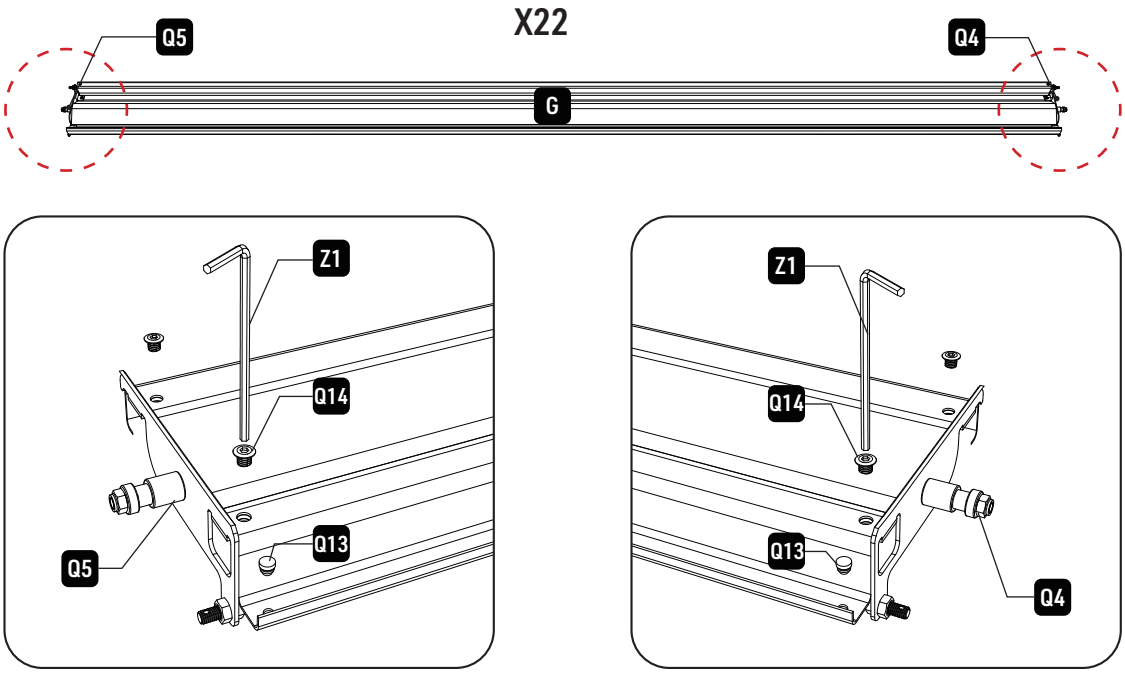

STEP 2 Building the Frame

Components

Parts

A		2
A2		2
B		1
B1		1
C		2
D		2

Q1		4
Q2		4

Q7	6mm	24
Q20	6×35 4mm	16

Tools

Z3	4mm	1
Z4	4mm	1

Z5	6mm	1
Z6	6mm	1

Attention:
1. **Assemble Posts first.**
2. **Remove D from Beam B and B1. It will be installed at a later step.**

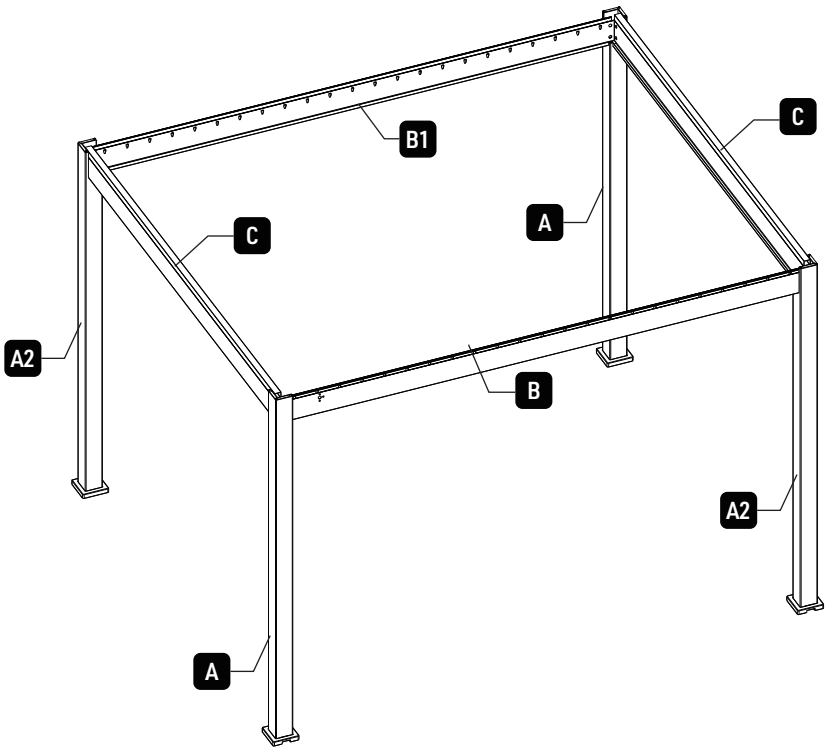

STEP 2-1

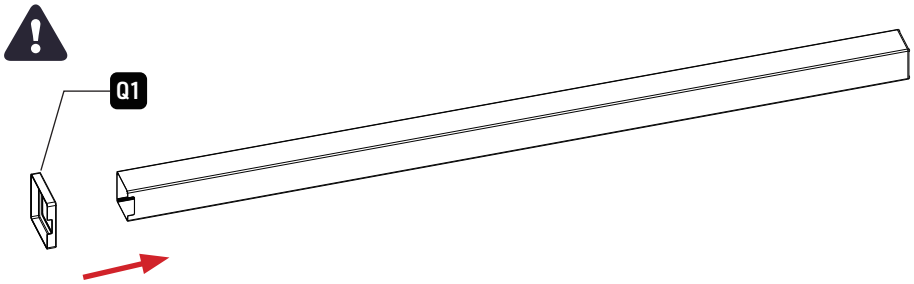

1. Slide **Q1** (post skirt) onto **A & A2**(post). Make sure to align notch on **Q1** with **A & A2**(post), as this is a drain outlet.

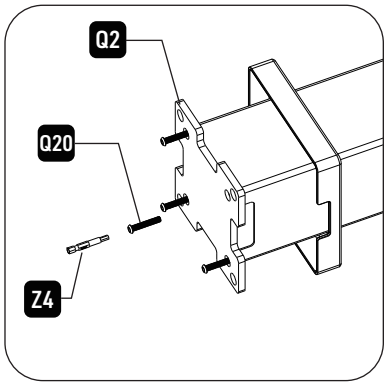

2. Use **Q20**(socket screw 6x35) to install **Q2**(base plate) to attach **A** (post). Use **Z4**(4mm bit) to secure.

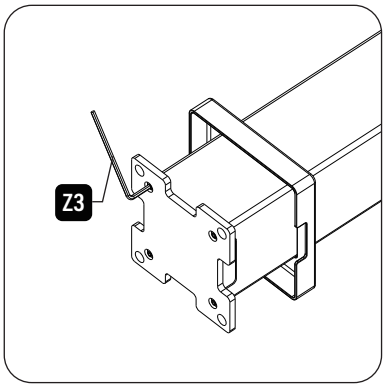

3. Tighten the screw with **Z3** if needed.

STEP 2-2

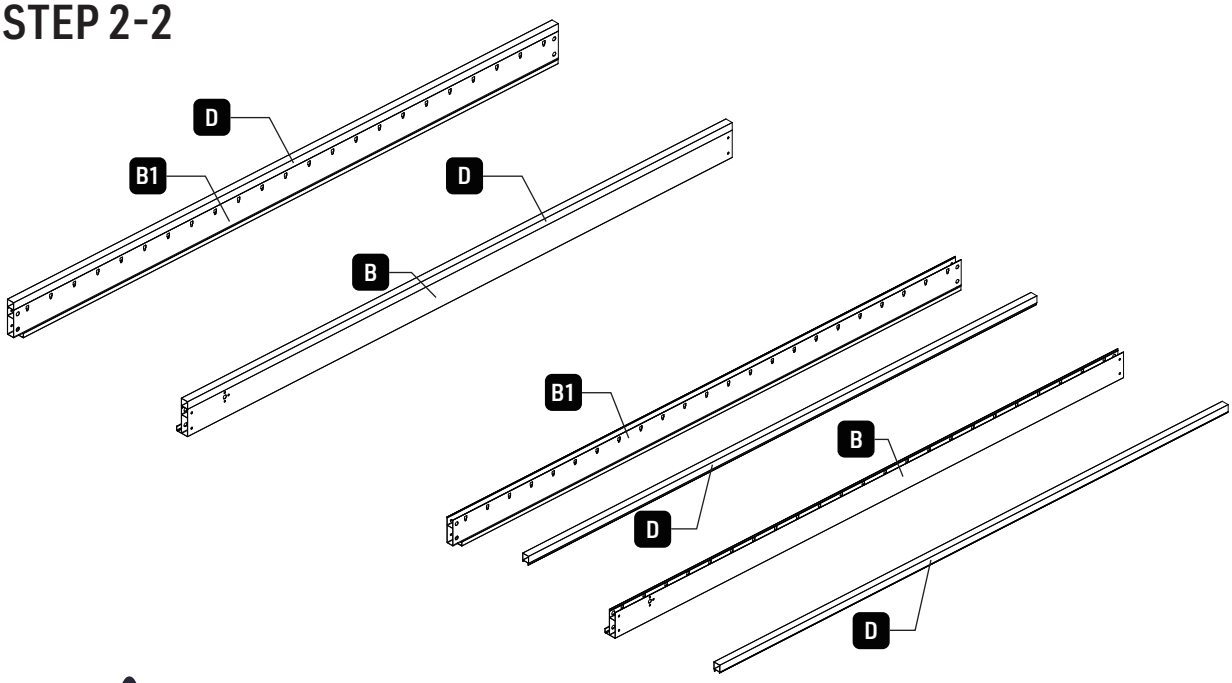

Remove **D** (top beam) from **B** and **B1**.

STEP 2-3

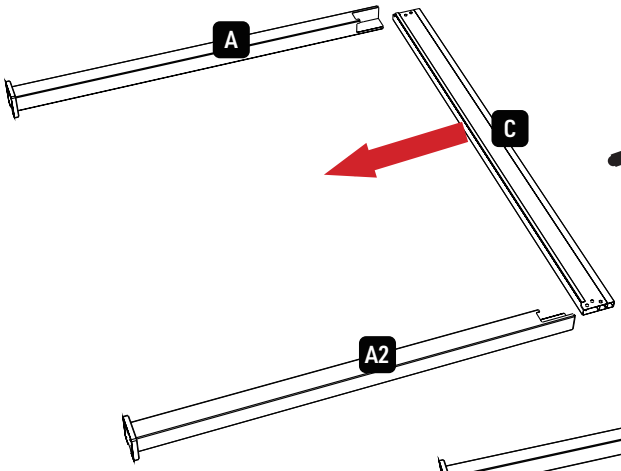

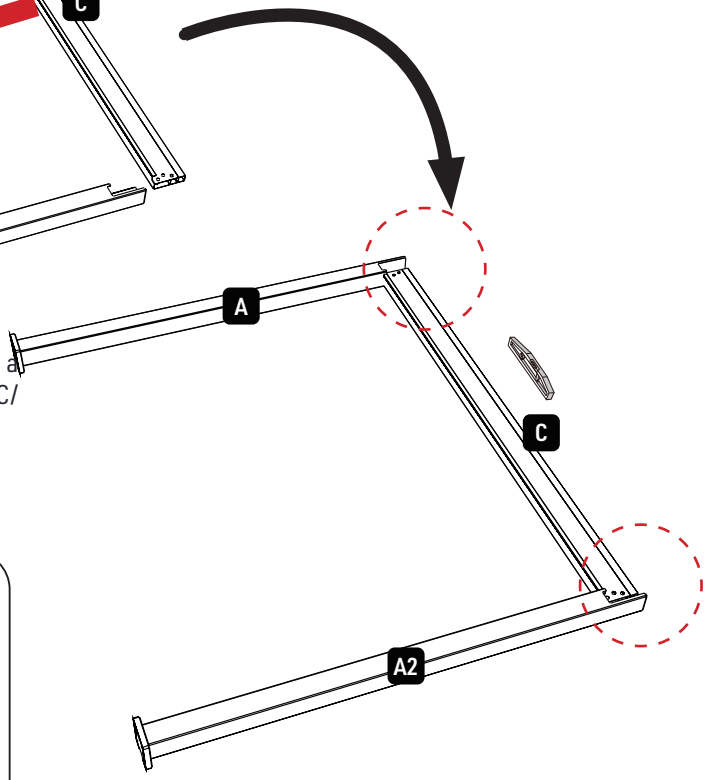

1. Place the **A/A2** (post) and **C** (side beam) on a flat surface.Use a square to make sure Beam C/ Post A are properly aligned before tightening. Attach **C** (side beam) to **A/A2** (Post)

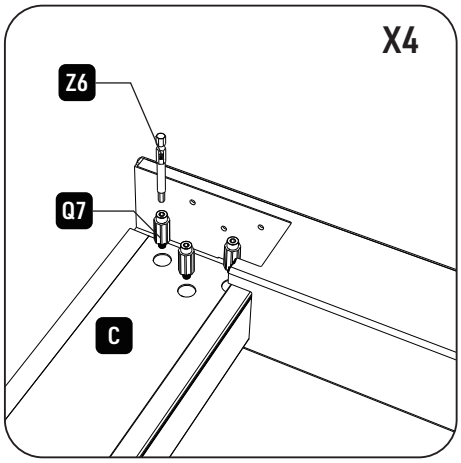

2. Use **Q7** (Beam fixing screw) and insert into **C** (side Beam) to connect **C** to **A**, tighten with **Z6** (6mm bit) . We suggest install top one first.

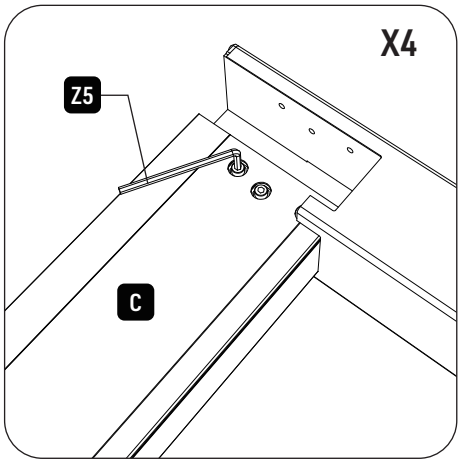

3. Use hex wrench **Z5** to tighten manually if needed.

Attention:
Be careful when placing posts on surface as they can be scratched.

STEP 2-4

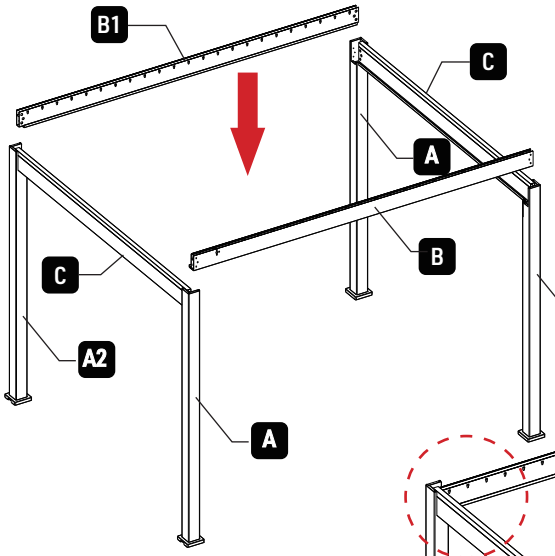

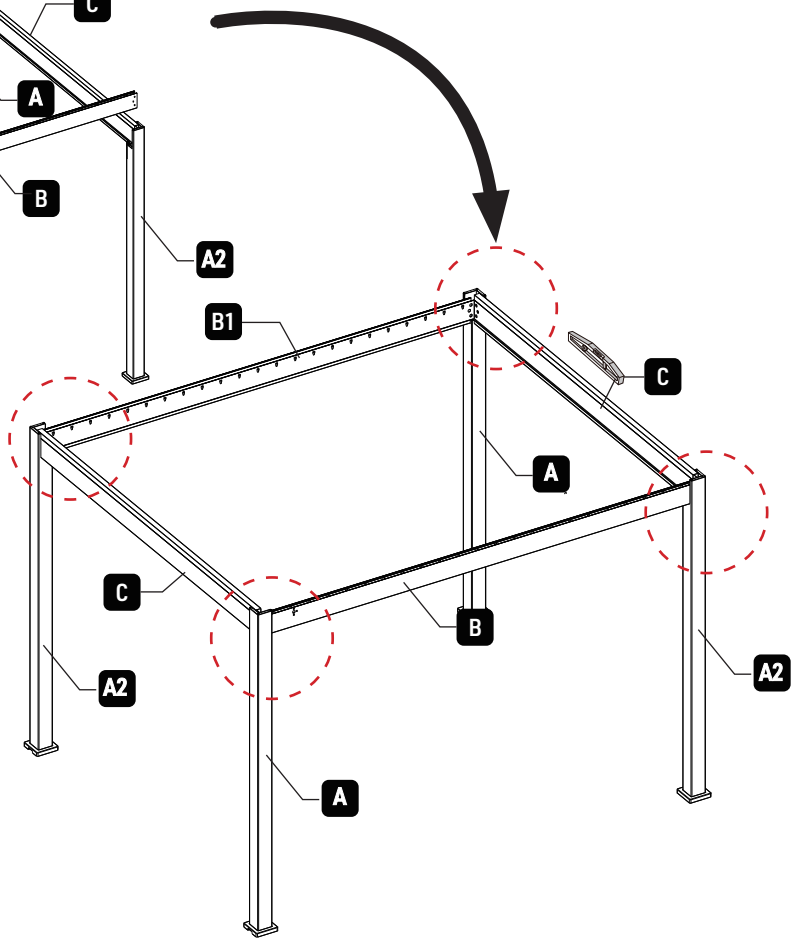

1. Insert Beams **B/B**1 into **A/A2** (post) aligning holes. Use a square to make sure Beam **B/B1** to Post **A** are properly aligned before tightening.

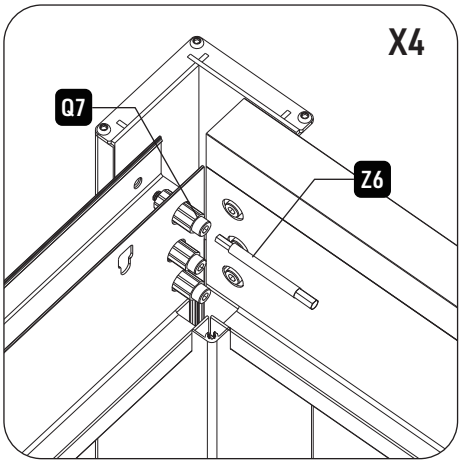

2. Insert Q7 (beam fixing screw) into **B&B1** (beam) attaching it to **A** (post). Use **Z6** to secure.

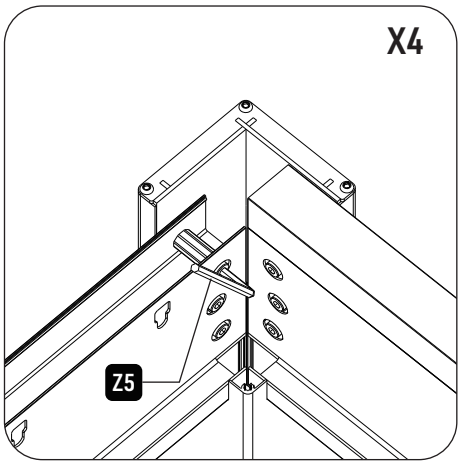

3. Use hex wrench **Z5** to tighten manually.

Attention:
Please exercise caution when placing aluminum profiles on the ground to avoid scratches.

STEP 3 Installing Louvers

Components

Parts

D		2
F		2
H		1

Q8		1
Q9		1
Q10		16
Q11		1
Q12		46

Q15	10×80	16
Q16		2
Q17		44
Q18		2
Q21	6×45 4mm	3

Q24		44

Tools

Z3	4mm	1
Z4	4mm	1

Attention:
Please follow the order outlined in the instruction manual when assembling louvers.

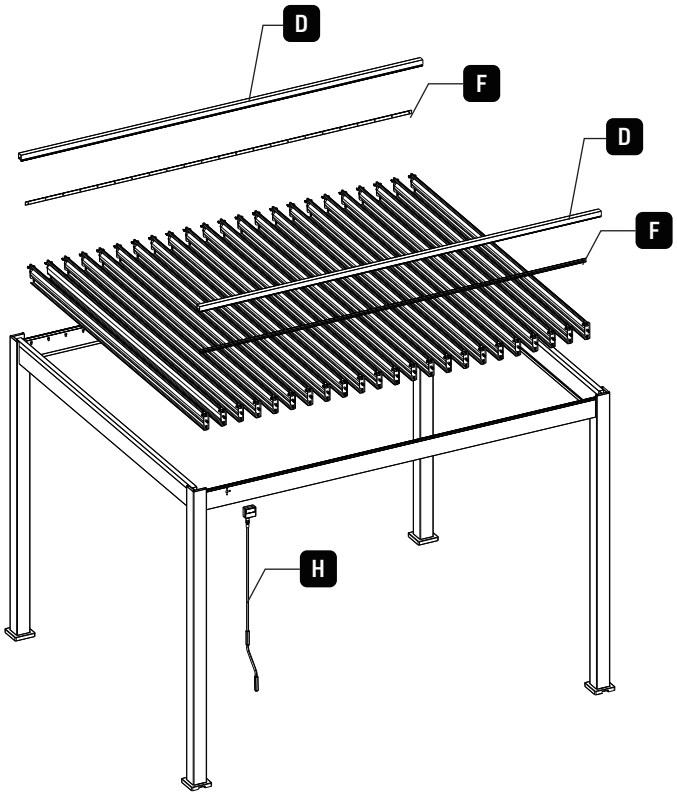

STEP 3-1

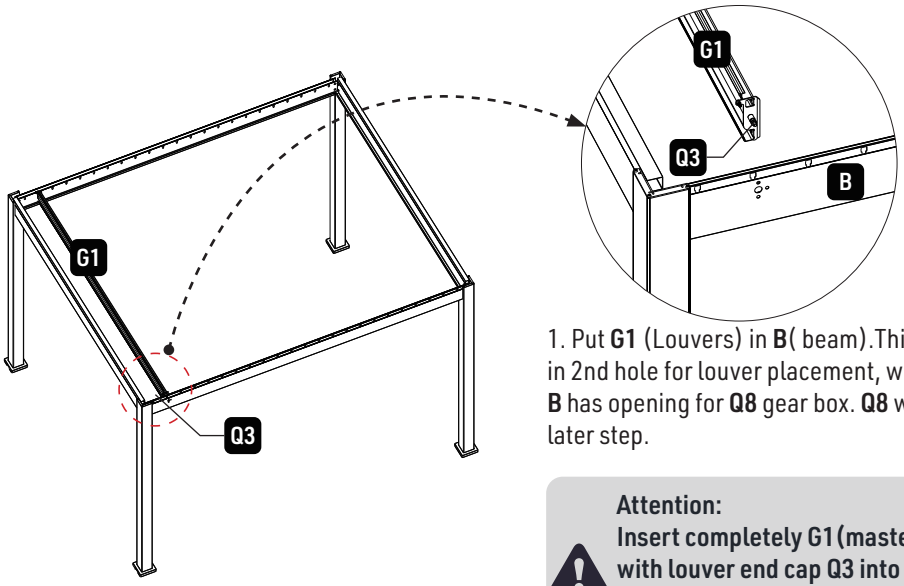

1. Put **G1** (Louvers) in **B**(beam).This is placed in 2nd hole for louver placement, where Beam **B** has opening for **Q8** gear box. **Q8** will install in later step.

Attention:
Insert completely G1 (master louver) with louver end cap Q3 into notch of Beam B first. This will allow clearance to insert opposite side into Beam B1.

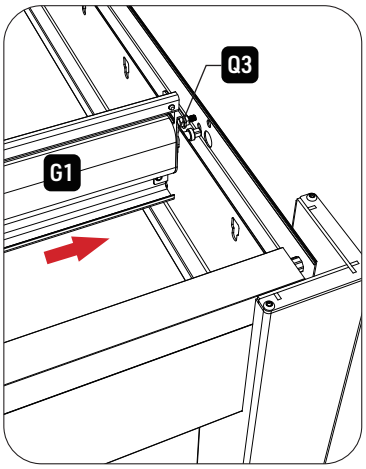

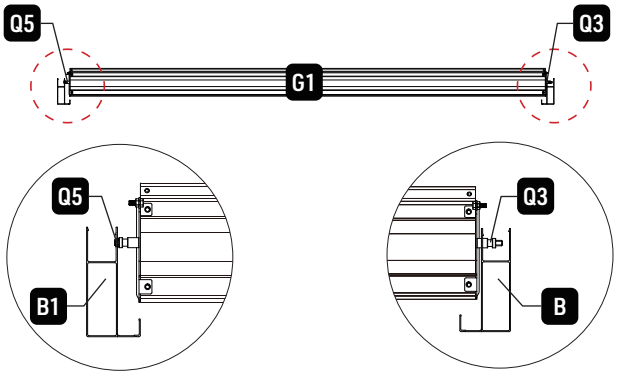

2. Insert **Q3** end of Master Louver **G1** first into 2nd hole of Beam **B**. Then insert opposite side into Beam **B1**.

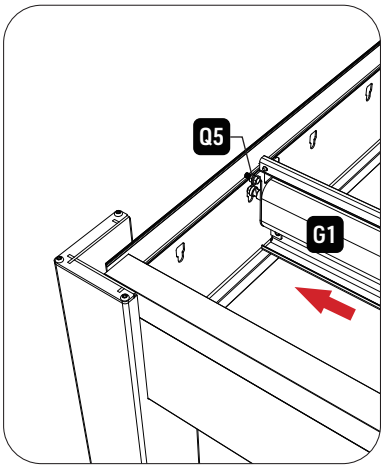

STEP 3-2

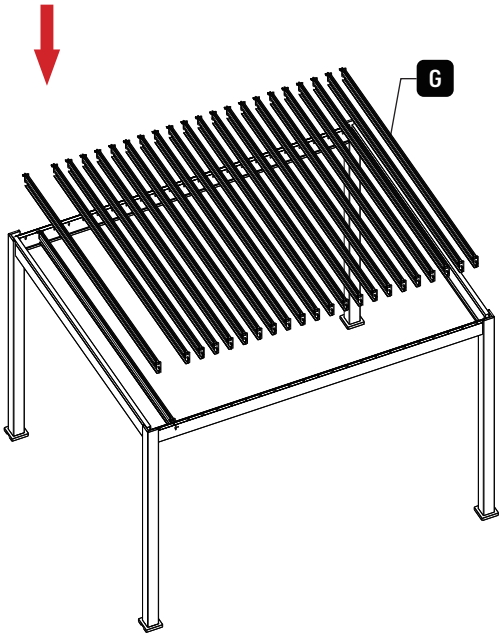

X22

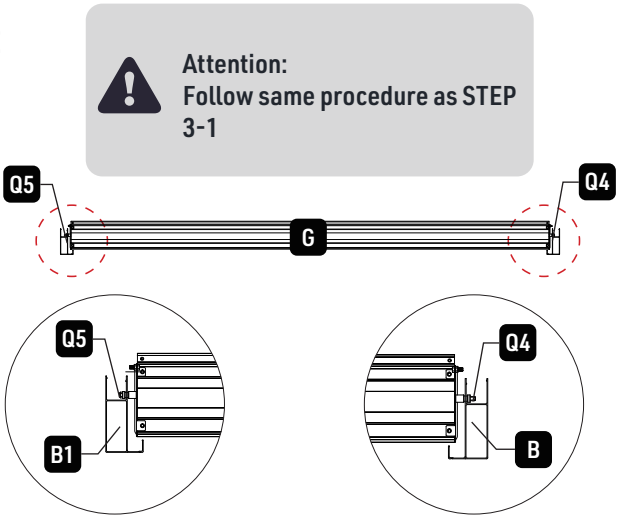

Place all **G** (louvers) on beam as same procedure as STEP 3-1

STEP 3-3

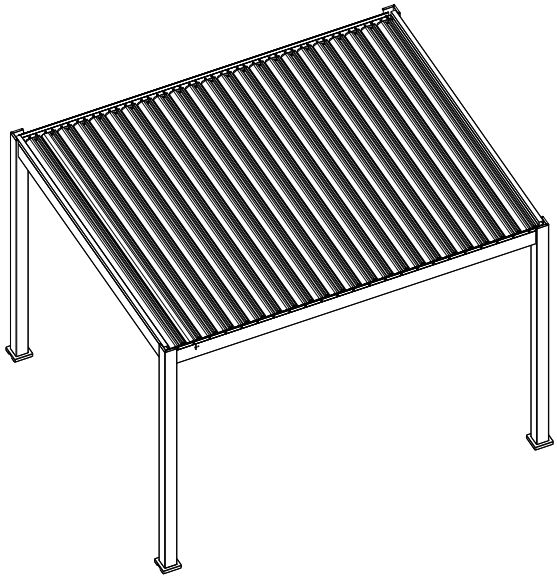

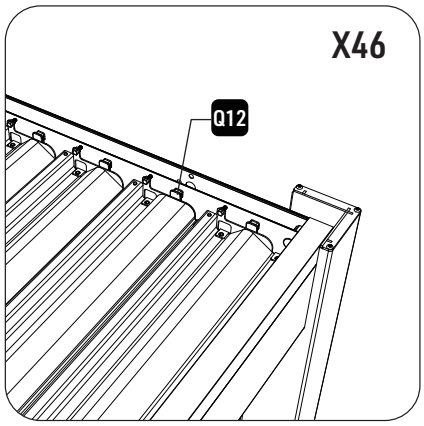

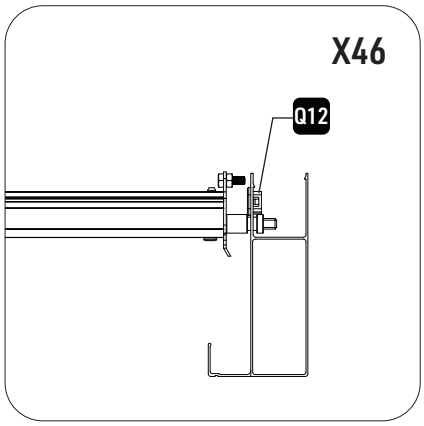

After louvers are installed, lay them in the closed position and insert **Q12** into the opening above spin (**Q6**) on louver end cap.

STEP 3-4

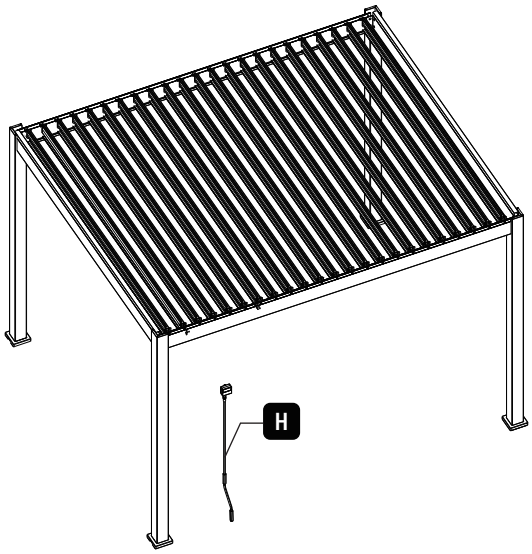

Attention:
Louvers should be vertical

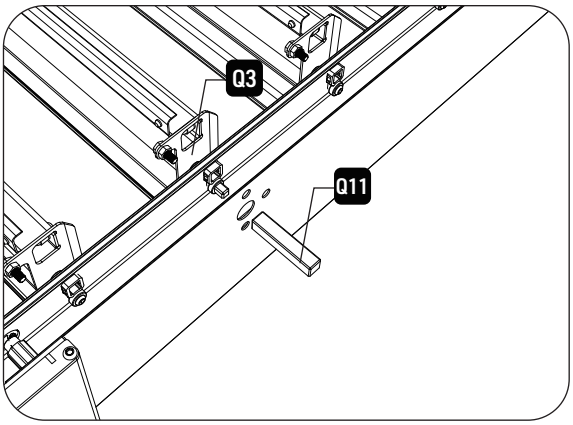

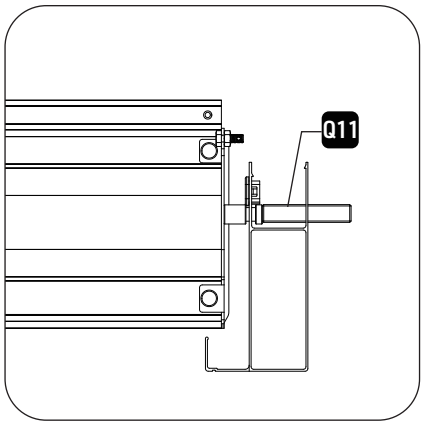

1. Place **Q11** (cylinder) on **Q3** (master louver end cap)

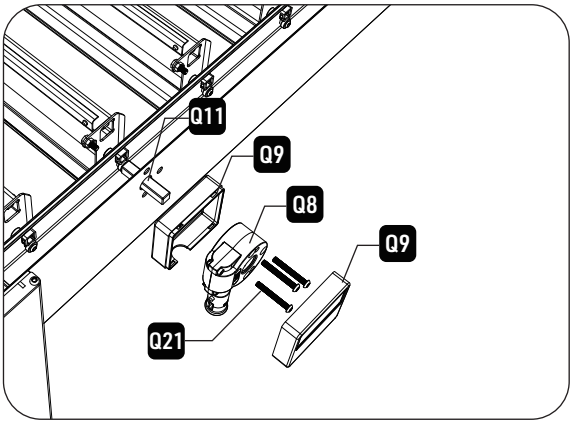

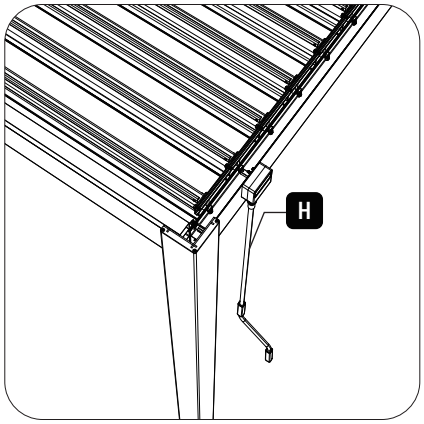

1. Remove cover from **Q9** , place **Q9/Q8** onto **Q11** and secure with **Q21** screws. Then add **Q9** cover. Install **H** onto **Q8**.

STEP 3-5

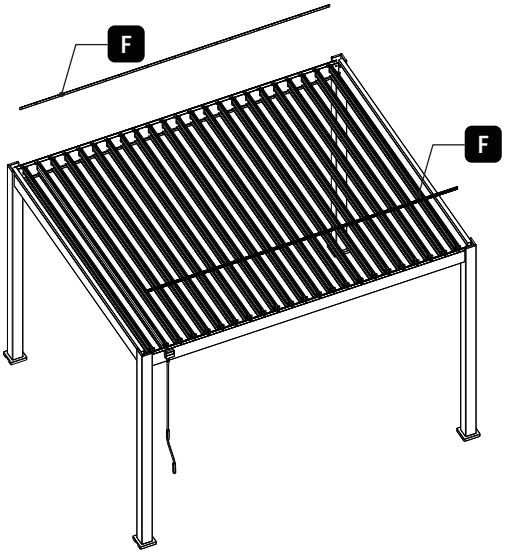

Attention:
Keep all louvers vertical for easy assembly of F - connector bar.

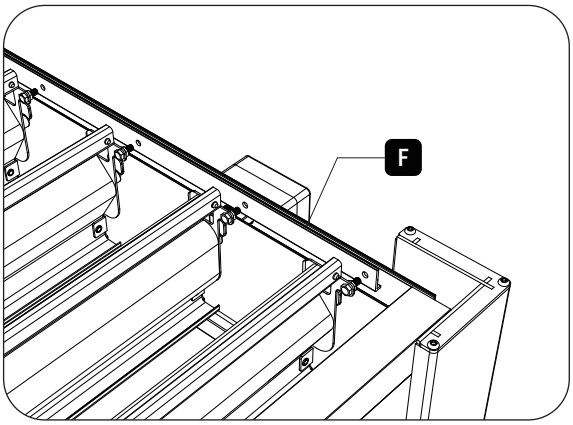

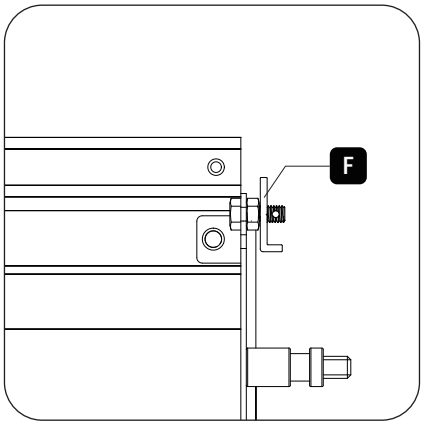

1. Place **F** (connector bar) on louver end caps

STEP 3-5

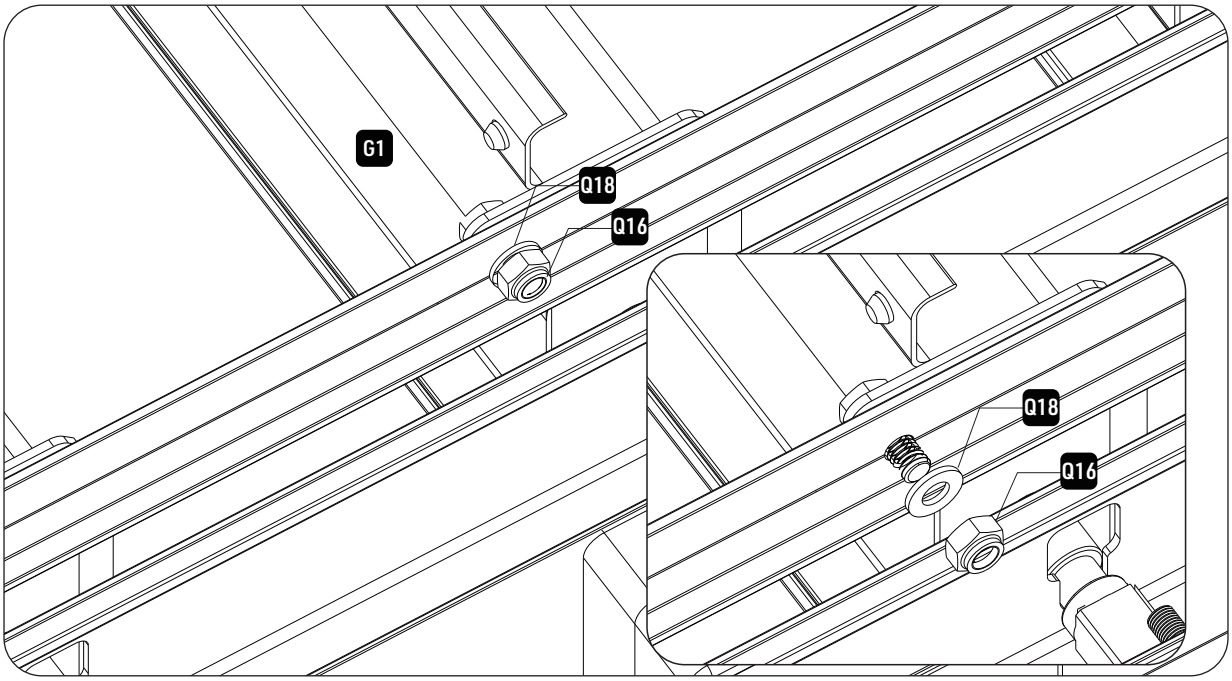

2.Place **F** connector bar onto Screw of end caps **Q5/Q3** located on Louver **G1**. Then place **Q18/Q16** and tighten.

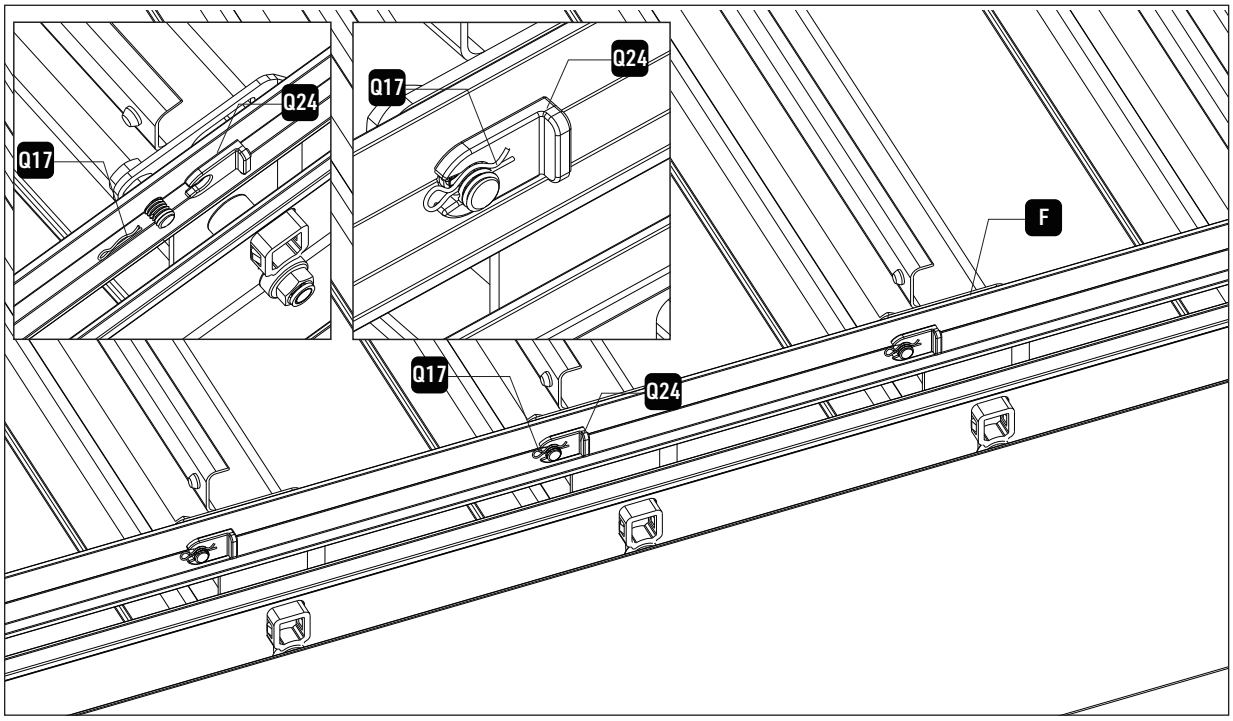

3.Place **F** connector bar onto Screw of end caps **Q5/Q4** located on Louvers **G**. Then place **Q17/Q24** to secure.

STEP 3-6

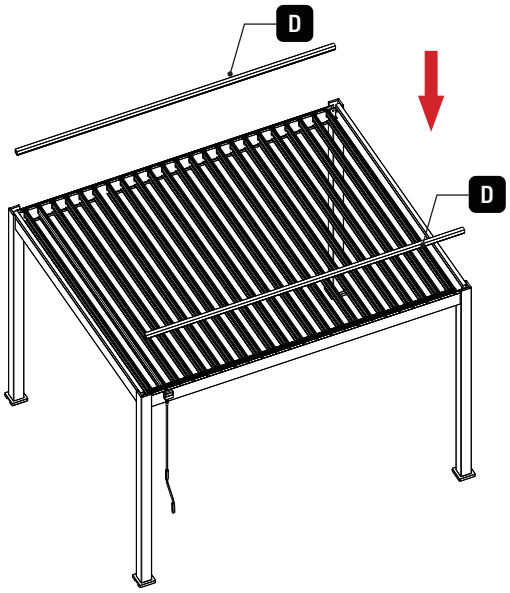

Attention:
Place D (cap beam) onto Beam B and B1.
Gently tap into place to connect.

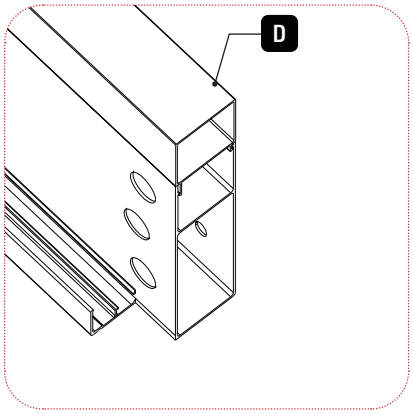

STEP 3-7

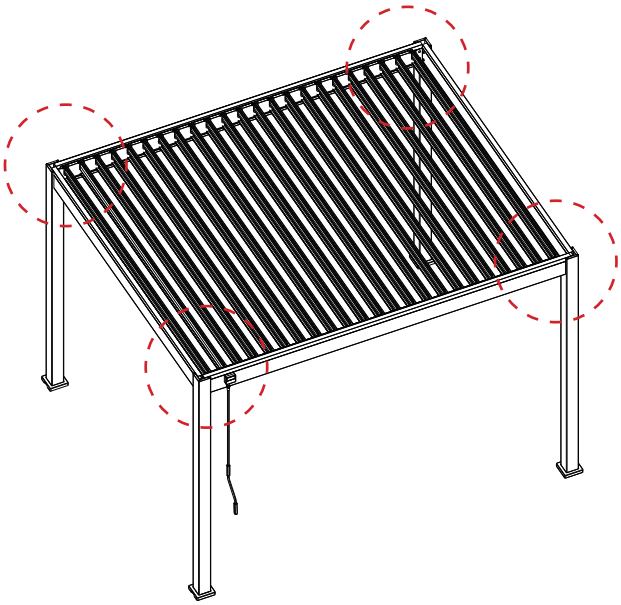

Attention:
Keep all louvers vertical.

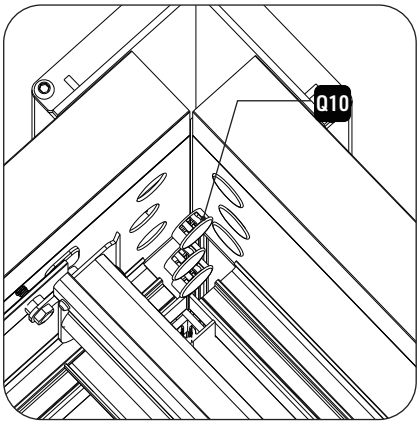

Cover holes in each corner on Beams **C/B/B1** with **Q10** (plastic cap).

STEP 3-8

Attention:
Make sure the unit is "square" before anchoring.

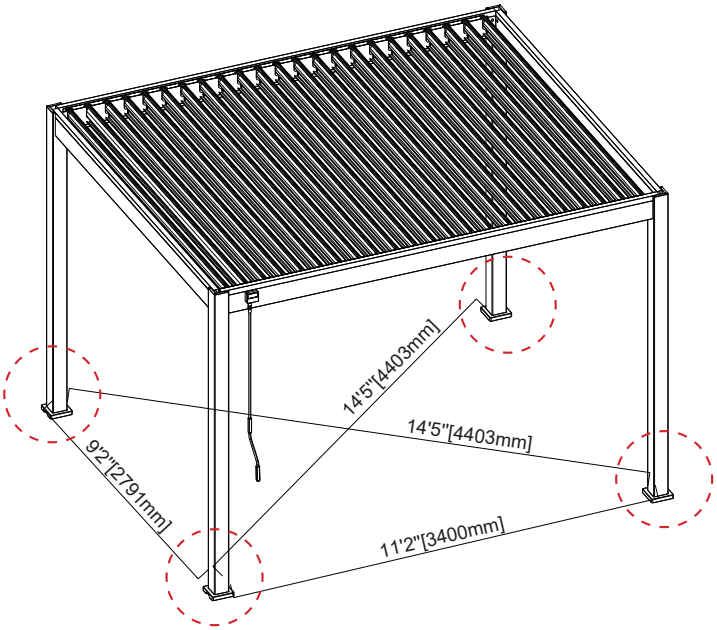

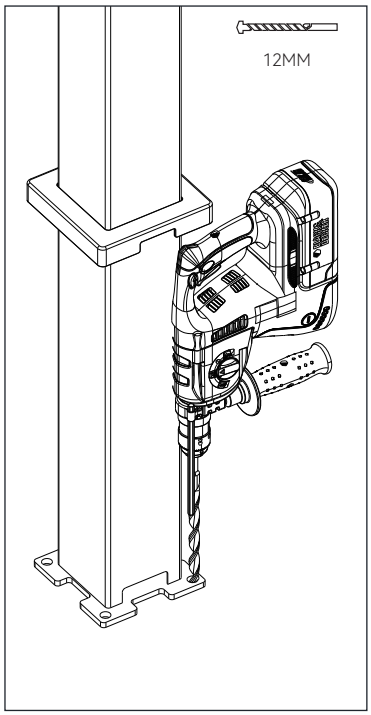

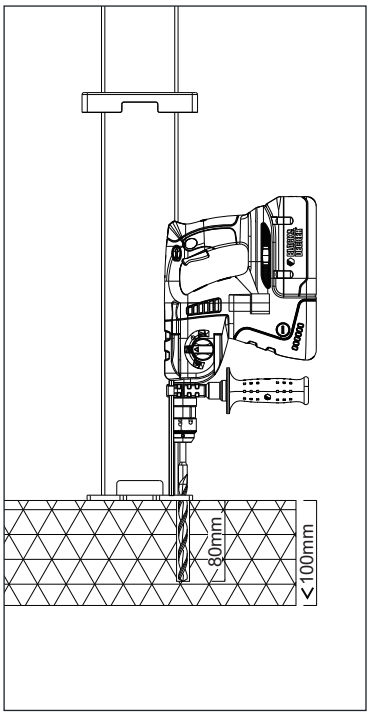

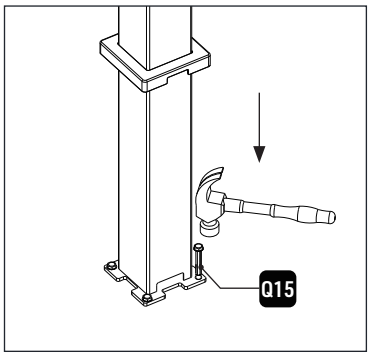

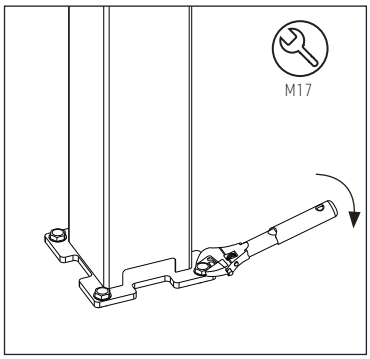

Check all dimensions of the pergola, then anchor base plate **Q2** to concrete foundation using **Q15** (expansion bolt). Caution the post skirting can scratch post.

@paragonoutdoorcompany

Paragon Group USA

Customer Service Contact Information: 1-877-782-4482

support@paragon-outdoor.com